# SERIES - S, SIZE - 4 SPRING LOADED TEST PROBES
# .165"(4,18) to .187" (4,75) CENTERS / .250" (6,35) STROKE

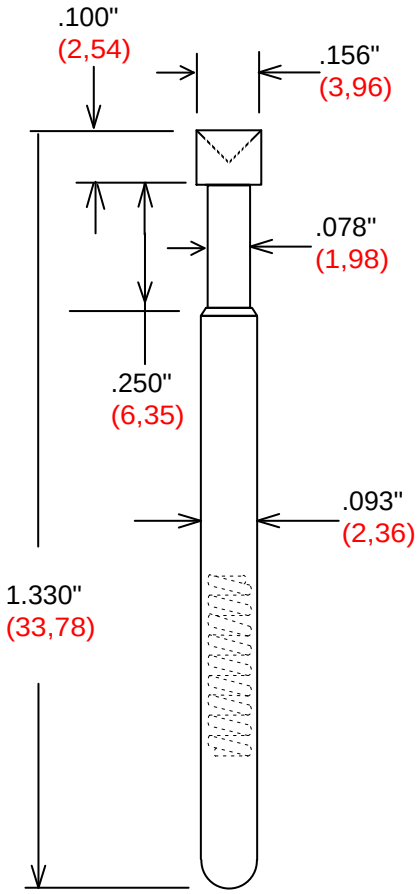


## TIP STYLES

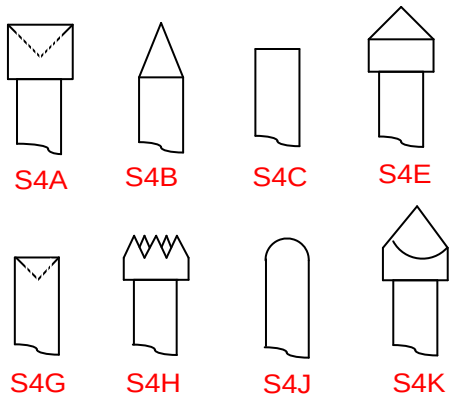


PROBE TECHNICAL DATA
Recommended Minimum Centers - .165" (4,18)
Current Rating - 5 amps continuous
Spring Force - (5.0) or (7.0) oz. @ .170 (4,32) Travel
Contact Resistance - Less then 20 milliohms
Recommended Working Travel - .170) (4,32)

MATERIALS
Contact Barrel - Nickel / Silver, Gold Plated.
Spring - Stainless Steel, Gold Plated.
Plunger - Full-Hard Beryllium Copper, Gold Plated over Nickel.

| How To Order: | SERIES | | SIZE | | TIP STYLE | | SPRING FORCE | | PLATING |
|---|---|---|---|---|---|---|---|---|---|
| Example | S | - | 4 | - | S4A | - | 5.0 | - | G |

## RECEPTACLES

RECEPTACLE SIZE- 4 DATA
Style : Solder Cup
Style : Wire Wrap .025" Sq. Post.
Drill Size : #35
Mounting Hole Size : .108"/.110"

MATERIAL:
Nickel / Silver, Gold Plated
Wire Wrap Post Gold Plated.

SOLDER CUP
P.N. R4SC

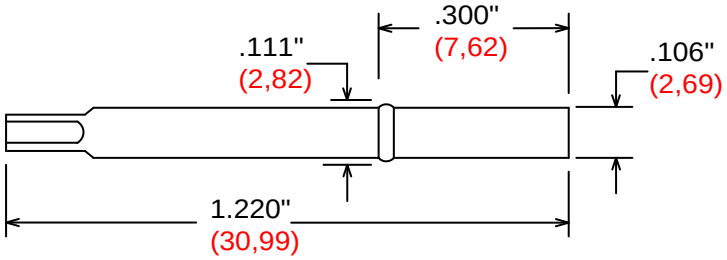


WIRE WRAP
P.N. R4WW

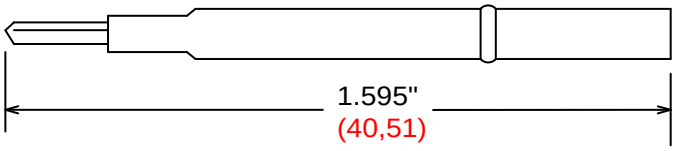


TEST-X FIXTURE PRODUCTS 7117 Arlington Ave. Ste. G, Riverside, CA 92503 ( pH. 951-688-3067) (Fax 951-688-1543) www.test-x.com
Copyright (c) 2001